ITEM NO.	PART NUMBER	DESCRIPTION	QTY.
1	100-00089	BACKING PLATE	2
2	100-00492	SPRING HANGER	2
3	100-00713	EQUALIZER HANGER BRACKET	1
4	100-01188	FENDER BRACKET L.H.	1
5	100-01189	FENDER BRACKET R.H.	1
6	100-01190	CENTER FENDER BRACKET	1
7	100-01496	TANDEM HANGER PLATE	1
8	221-00054	ANGLE	1

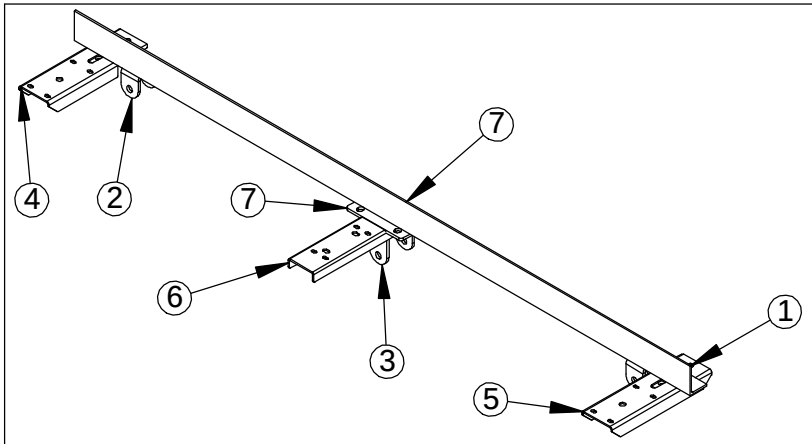

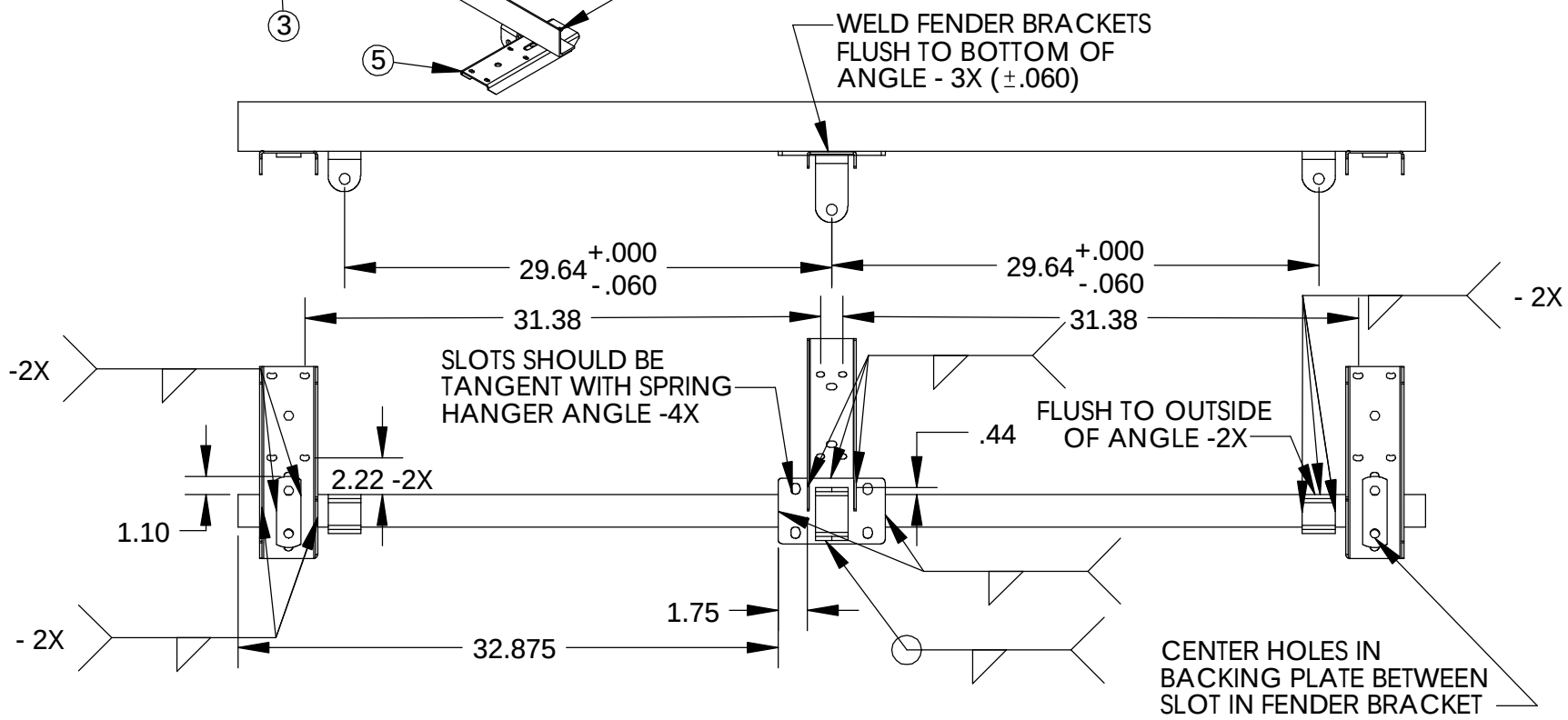

ALL DIMENSIONS ARE IN INCHES UNLESS OTHERWISE STATED
TOLERANCES EXCEPT AS NOTED

DECIMALS:

.X	±0.100
.XX	±0.060
.XXX	±0.030
.XXXX	±0.010

ANGLES: ±1°

ALL FORMED ANGLES EQUAL 90° UNLESS NOTED OTHERWISE

( ) INDICATES REFERENCE

THE INFORMATION IN THIS DRAWING IS THE SOLE PROPERTY OF KARAVAN TRAILERS, INC. ANY REPRODUCTION IN PART OR WHOLE WITHOUT THE WRITTEN PERMISSION OF KARAVAN TRAILERS, INC. IS PROHIBITED

APPROVED BY: ---

DRAWN BY: DON CASTLE

DATE: 11-20-08

SHEET: 1 OF 1

SCALE: N/A

KARAVAN TRAILERS

TITLE: SPRING HANGER WELDMENT

MAT'L: SEE B.O.M.

FINISH: N/A

DWG. #: **300-02109-A**

DWG. REV.	ECR/NDR NUMBER	REVISED BY	DATE	DESCRIPTION
A	14781	DLC	11-20-08	DRAWING CREATED

PDF created with pdfFactory trial version www.softwarelabs.com